EX.NO:1
-2-2026

VERIFICATION OF KIRCHHOFF'S LAWS

AIM:

To Verify Kirchhoff's Voltage law and Kirchhoff's Current Law both theortically and pratically for a given DC Circuit.

APPARATUS REQUIRED:

S.NO	APPARATUS	SPECIFICATION	QUANTITY
1	Regulated Power Supply (RPS)	0-30V	1
2	Voltmeter	(0-30V) MC	3
3	Ammeter	(0-10mA) MC	3
4	Resistor	1KΩ (0-10mA) MC	3
5	Bread Board	-	1

PROCEDURE:

1) Give connections as per the circuit diagram
2) Switch ON the Supply, Vary the RPS (Regulated Power Supply) and Set a particular input voltage.
3) Note down the readings of Ammeters and Voltmeters and Tabulate them.

CIRCUIT DIAGRAM:

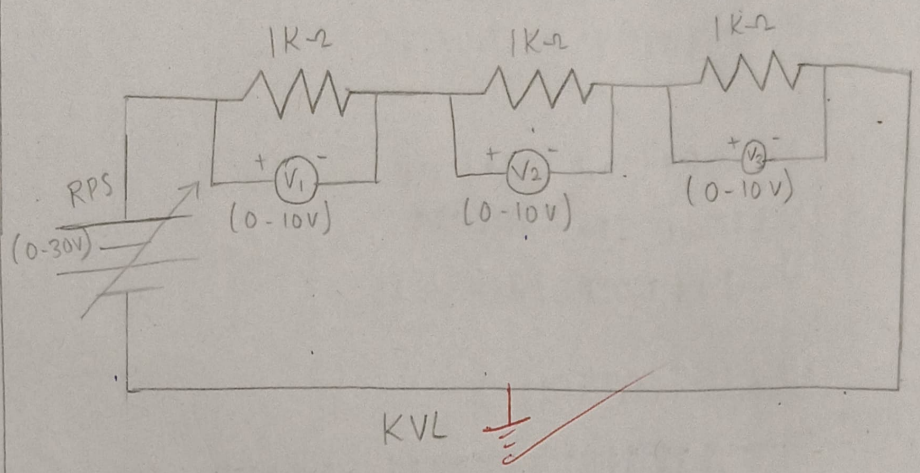

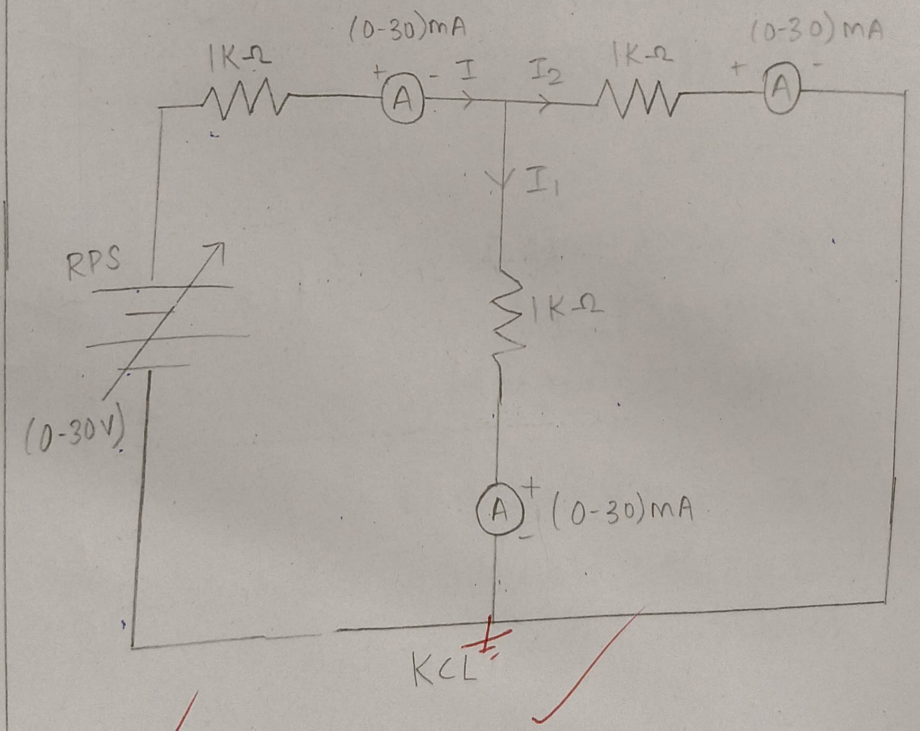

4). Vary the RPS for different input voltages and note down the readings of all the meters.

5) Reduce the RPS to its minimum value and switch off the supply.

6) Using the tabulated values, verify Kirchoff's laws pratically and verify it theoretically.

TABULAR COLUMN:

V (volts)	V_1 (volts)	V_2 (volts)	V_3 (volts)	$V=V_1+V_2+V_3$	I (amps)	I_1 (amps)	I_2 (amps)	$I=I_1+I_2$ (amps)
2	0.7	0.7	0.7	2.1	1.16	0.58	0.58	1.16
6	2.03	2.03	2.03	6.09	3.4	1.7	1.7	3.4
9	3.05	3.05	3.05	9.15	4.8	2.4	2.4	4.8

80
0/8 verified

CALCULATION:

KVL

(i) Pratical Verification

* V/I Should be Constant (Ohm's Law)
* V Should be equal to $(V_1+V_2+V_3)$
* I Should be equal to (I_1+I_2)

(ii) Theoretical Verification

* Kirchoff's Voltage Law

(i) For V=2V

$V_1=0.7V$, $V_2=0.7V$, $V_3=0.7V$

$V=V_1+V_2+V_3 = 0.7+0.7+0.7$

$=2.1V$

(ii) $V = 6V$

$V_1 = 2.03V$, $V_2 = 2.03V$, $V_3 = 2.03V$

$V = V_1 + V_2 + V_3 = 2.03 + 2.03 + 2.03 = 6.09$

(iii) $V = 9V$

$V_1 = 3.05V$, $V_2 = 3.05V$, $V_3 = 3.05V$

$V = V_1 + V_2 + V_3 = 3.05 + 3.05 + 3.05 = 9.15$

Kirchoff's Current Law:

(i) $I = 0A$, $V = 2V$

$I_1 = 0.58A$, $I_2 = 0.58A$

$I = I_1 + I_2 = 0.58 + 0.58 = 1.16A$

(ii) $I = 0A$, $V = 6V$

$I_1 = 1.7A$, $I_2 = 1.7A$

$I = I_1 + I_2 = 1.7 + 1.7$

$= 3.4A$

(iii) $I = 0A$, $V = 9V$

$I_1 = 2.4A$, $I_2 = 2.4A$

$I = I_1 + I_2 = 2.4 + 2.4$

$= 4.8A$

MARKS SPILT UP :-

S.No	Description	Marks Alloted	Marks Obtained
1)	Experimental Setup/ Connections	20 Marks	20
2)	Observation/Readings	20 Marks	20
3)	Calculation / Result	20 Marks	20
4)	Viva	20 Marks	20
5)	Record	20 Marks	20
6)	Total	100 Marks	100

10

4/2/26

RESULT :

Thus, Kirchoff's Current Law and Kirchoff's Voltage Law are verified Pratically and Theoretically.